HERITAGE
BATHROOMS

Caversham

Caversham 150mm Open Base Unit Graphite

FFGRAOBU150

Product Features

- UK designed. Manufactured to a high quality
- Easy to clean
- Durable to withstand everyday use in a busy household
- Stylish yet functional storage solution
- Adjustable feet for uneven floors
- Available in 3 colours for bathroom personalisation

Product Specification

Product Construction:
Oak

Product Finish:
Graphite

Product Weight (Kg):
13.01

Packaged Product Weight (Kg):
15.94

Dimensions in (mm)

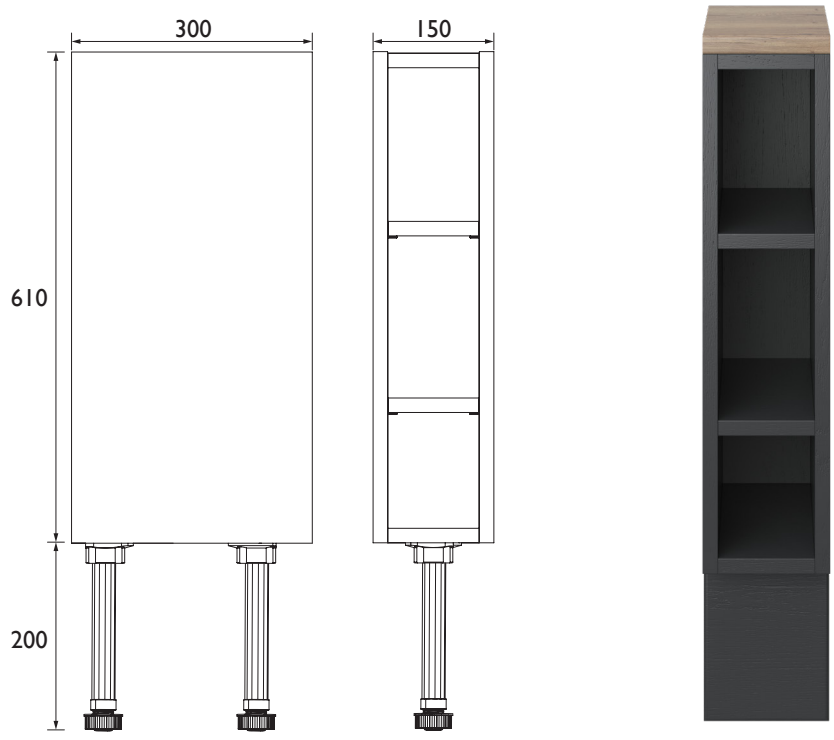

PRODUCT DATA SHEET

Revision: D1

Heritage Bathrooms, Birch Coppice Business Park, Dordon, Tamworth B78 1SG
Tel: 0844 701 8501 | Fax: 0844 701 8502 | Web: www.heritagebathrooms.com | Email: technical@heritagebathrooms.com

The information contained on this page was correct at date of issue. Fitting dimensions are provided as a guide only. Some variation may occur due to manufacturing tolerances. Heritage Bathrooms pursues a policy of continuing improvement in design and performance of its products and so reserves the right to change specifications without prior notice

5 YEAR GUARANTEE