HERITAGE
BATHROOMS

Product Code: SHPDUAL01

Revision: D1

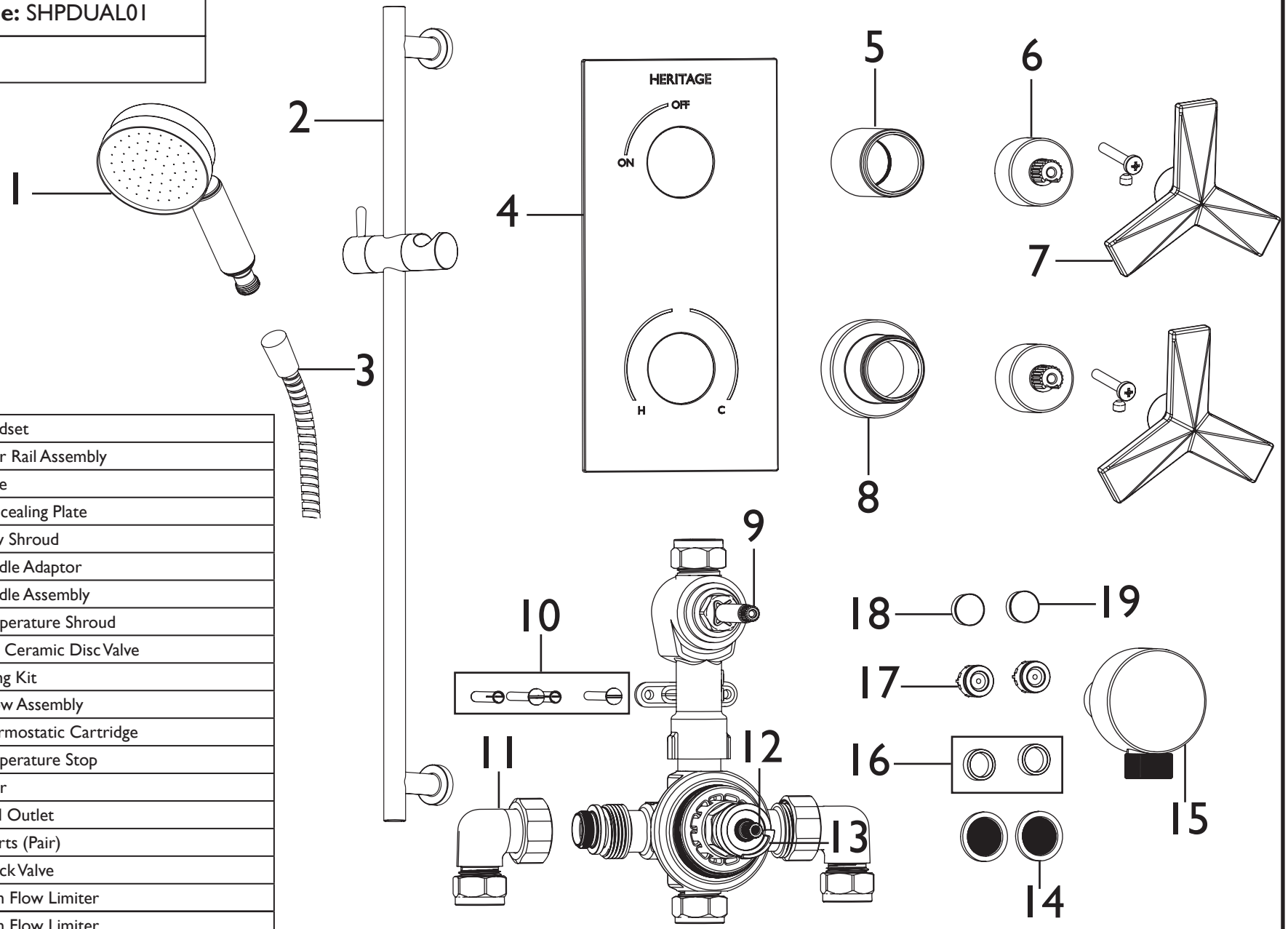

1	Handset
2	Riser Rail Assembly
3	Hose
4	Concealing Plate
5	Flow Shroud
6	Handle Adaptor
7	Handle Assembly
8	Temperature Shroud
9	3/4" Ceramic Disc Valve
10	Fixing Kit
11	Elbow Assembly
12	Thermostatic Cartridge
13	Temperature Stop
14	Filter
15	Wall Outlet
16	Inserts (Pair)
17	Check Valve
18	5lpm Flow Limiter
19	7lpm Flow Limiter